# CL.1 Deck valve clockwise closing cold - Chrome



20 000 705 Product version from 3/9/2015

- hole diameter valve 32 mm
- rosette 60 x 60 mm
- with cold marking
- WRAS

| | |
|---|---|
| Chrome | 20 000 705-00 |
| Brushed Platinum | 20 000 705-06 |
| Dark Chrome | 20 000 705-19 |
| Brushed Champagne (22kt Gold) | 20 000 705-46 |
| Champagne (22kt Gold) | 20 000 705-47 |
| Brushed Dark Platinum | 20 000 705-99 |

We reserve the right to change designs, product range and technical specifications without prior notice.
More information can be found at: www.dornbracht.com +49 (0) 2371 8899 900 mail@dornbracht.com

# CL.1 Deck valve clockwise closing cold - Chrome



20 000 705 Product version from 3/9/2015

mm [inches]

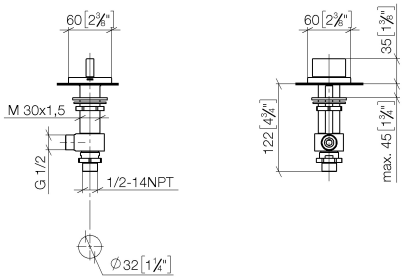


## Flow rate chart

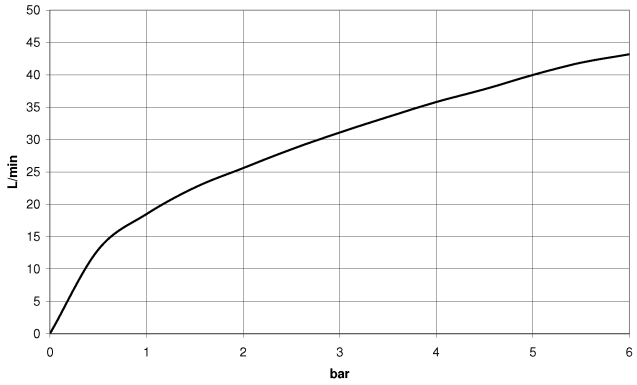


## Codes & Standards

| | | | |
|---|---|---|---|
| DIN 4109 | ISO 3822 | Scottish Water Byelaws | UK Water Supply Regulations |

Ü-Zeichen

# CL.1 Deck valve clockwise closing cold - Chrome

20 000 705 Product version from 3/9/2015

## Certificates

WRAS_2103 LGA_28

# CL.1 Deck valve clockwise closing cold - Chrome

20 000 705 Product version from 3/9/2015

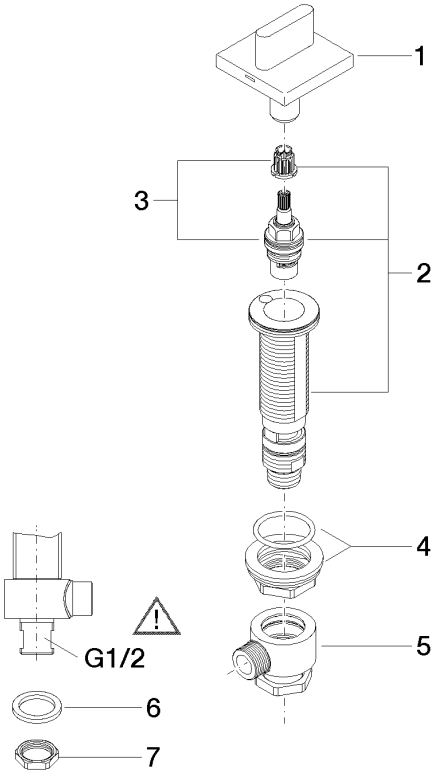


## Spare parts list

| No. | Item Number | Name | Quantity used | Delivery time |
|---|---|---|---|---|
| 1 | 90 20 70 051 04-00 | handle ( cold ) | 1 | 10 |
| 2 | 04 17 11 058 33 90 | side panel | 1 | 2 |
| 3 | 90 90 03 133 00 90 | top | 1 | 2 |
| 4 | 04 23 10 032 78 90 | fixing set | 1 | 2 |
| 5 | 04 17 11 023 10 90 | distributor | 1 | 2 |
| 6 | 90 23 30 040 00-00 | threaded connector | 1 | 10 |
| 7 | 09 30 11 059 90 | disc | 1 | 2 |
| 8 | 09 23 10 012 90 | nut | 1 | 2 |

We reserve the right to change designs, product range and technical specifications without prior notice.
More information can be found at: www.dornbracht.com +49 (0) 2371 8899 900 mail@dornbracht.com